PART NAME: KNOB	SCALE: 1:1	DATE: 5/30/17	DR. BY JD

THIS DRAWING IS THE PROPERTY OF DAVIES MOLDING COMPANY, IS SUBMITTED SOLELY AS A DESIGN OR ENGINEERING PROJECT. WE ACCEPT NO RESPONSIBILITY WHATSOEVER FOR THE PRACTICAL APPLICATION OF THE PIECES MADE TO THIS DESIGN.

DAVIES MOLDING — DESIGNERS & MANUFACTURERS OF KNOBS, HANDLES, CASES & CUSTOM PLASTIC COMPONENTS

P/N	2830ED
M NO.	2890–2830
CAVITY	2830
PLUNGER	2830
PLUNGER PIN	2830
PIN	3000–J–2
LANDING BAR	.472
PIN PLATE SHIM	.498
SHIM	.018
INSERT	I2511
CAVITY KEY	1/8x1/4x1 1/8
PLUNGER KEY	1/8x1/4x1 1/8

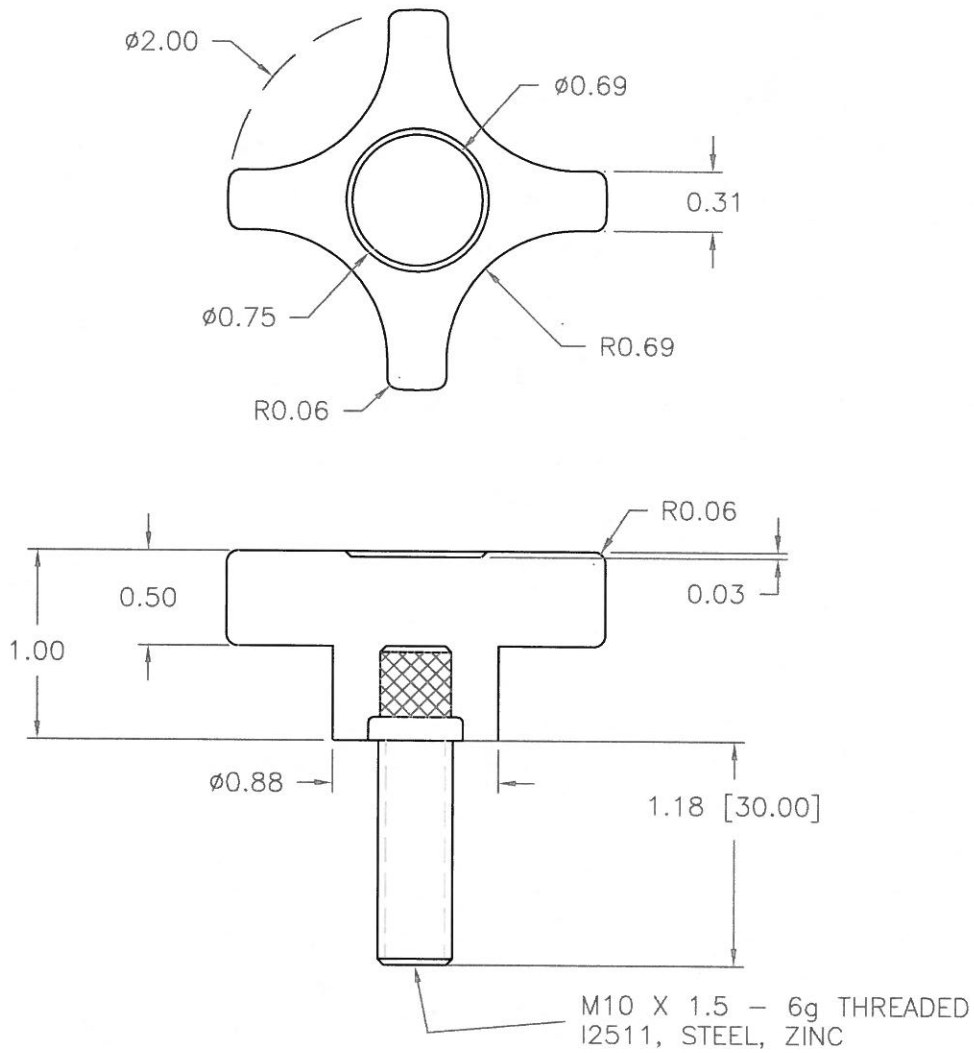

MATERIAL: #4311 PLENCO PHENOLIC (B41)
COLOR: BLACK

TOLERANCES: UNLESS OTHERWISE SPECIFIED	DO NOT SCALE DRAWING				
DECIMALS: X.XXX ± .005 X.XX ± .015	MM: X.XX ± 0.15MM X.X ± 0.4MM				
FRACTIONS ± 1/64	ANG. ± 1°	CHANGES			